Installation—50W (Dual-Head)

SATELIS 50W

01

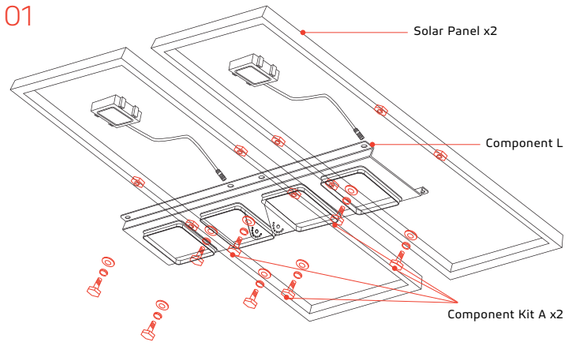

02

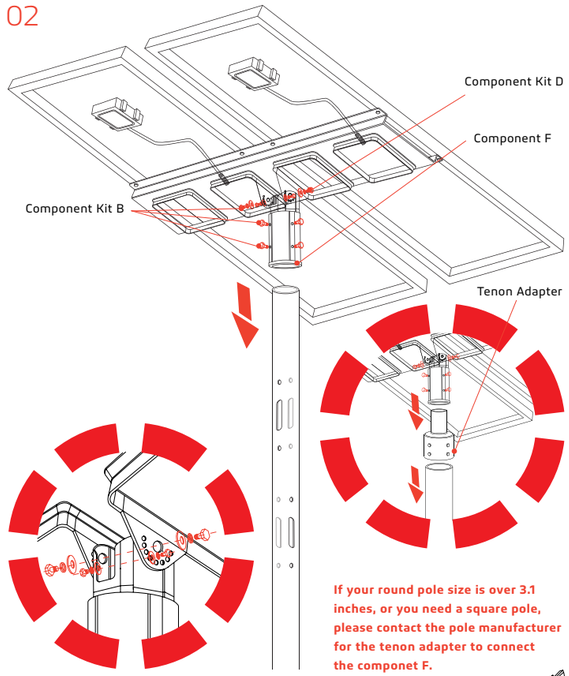

03

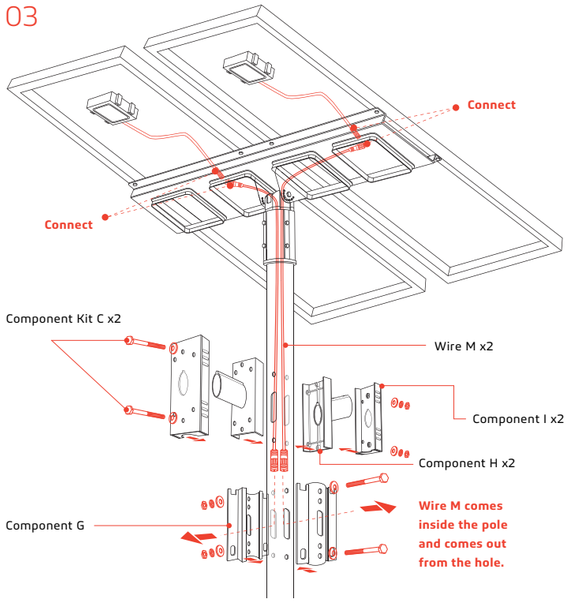

04

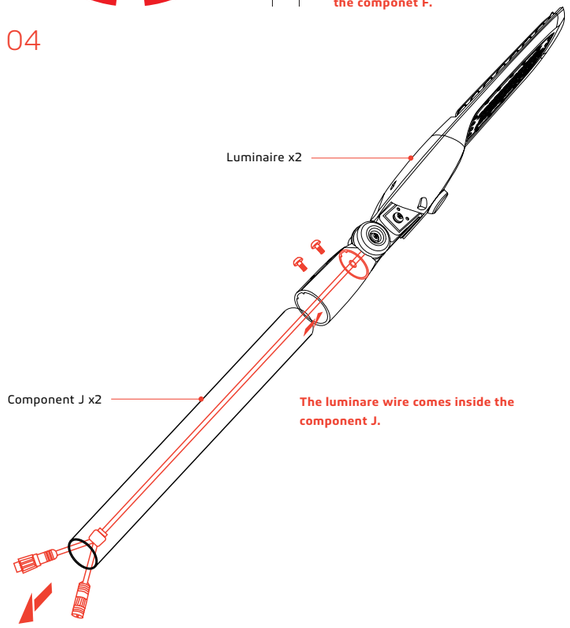

05

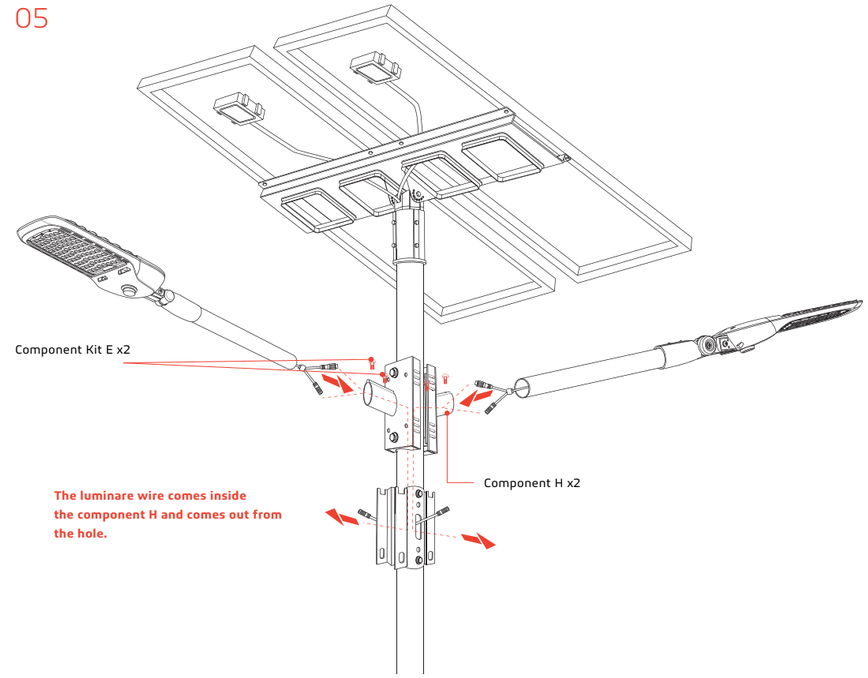
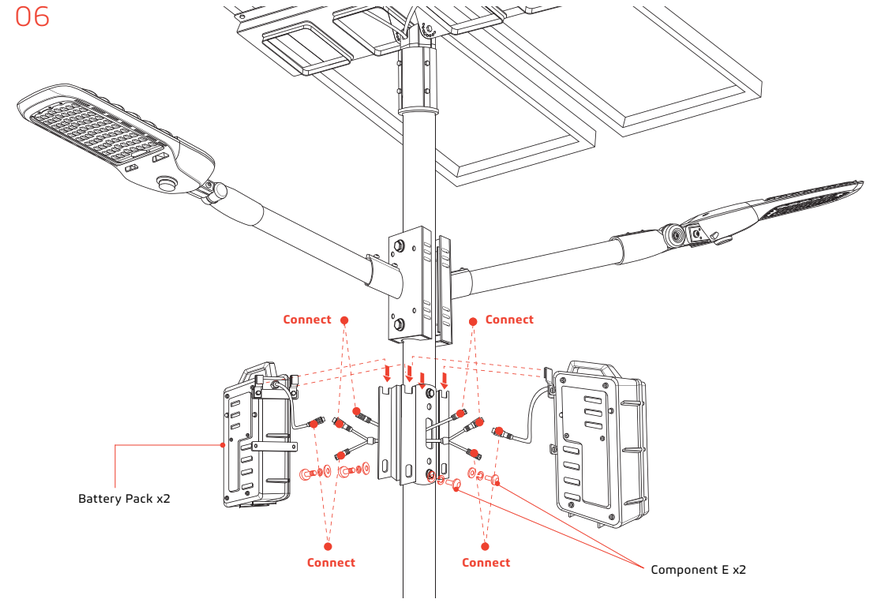
06